SECTION 4

SERIAL I/O INTERFACE

4.1 INTRODUCTION

The Serial I/O Interface is an optional feature of Micro 1600 series computers. It is a hardware/firmware option which, through microprogramming, can be used to control a serial device such as a Teletype or modem.

The serial channel is mounted on the Interface Board containing the front panel interface circuitry. The serial channel circuitry occupies the portion of the card which normally contains the standard Integral Teletype Controller. The user may order either the serial channel or the Integral Teletype Controller, but not both.

4.2 MICRO 800/1600 COMPATIBILITY

The serial I/O channel was originally designed as a low-cost teletype controller for Micro 800 computers. It has been replaced in Micro 1600 computers by the standard Integral Teletype Controller, but is still available for Micro 1600 systems where total 800/1600 compatibility is required.

The Micro 1600 firmware is identical to the firmware in Micro 800 series computers. The microprogram which controls the serial channel for operation of a 110-baud teletype with the Micro 800 is also present in the Micro 1600. Because of the faster clock in the Micro 1600, the standard firmware produces a transfer rate which is not teletype compatible. Therefore, use of the serial channel necessitates firmware changes, or slowing the Micro 1600 master clock to the rate of the Micro 800 clock.

4.3 USE AS TTY CONTROLLER

The following paragraphs describe operation of the serial I/O channel with a four-wire, full-duplex, 20-ma teletype. A cable is provided with the serial channel to connect directly to the Teletype.

4.3.1 GENERAL OPERATION

The four-wire I/O interface circuit is shown in Figure 4-1. The transmit portion of the circuit contains a 20-ma current source that can be turned on or off depending on the state of the I/O control register. When the I/O control register is in any state other than state 3, output of gate Z2 is high, emitter follower Q1 conducts, and approximately 20 ma of current flows through resistor R8. This current holds the Teletype in the mark condition. When the I/O control register is set to state 3 by a microcommand, the output of gate Z2 is low, emitter follower Q1 cuts off, and no current flows to the Teletype.

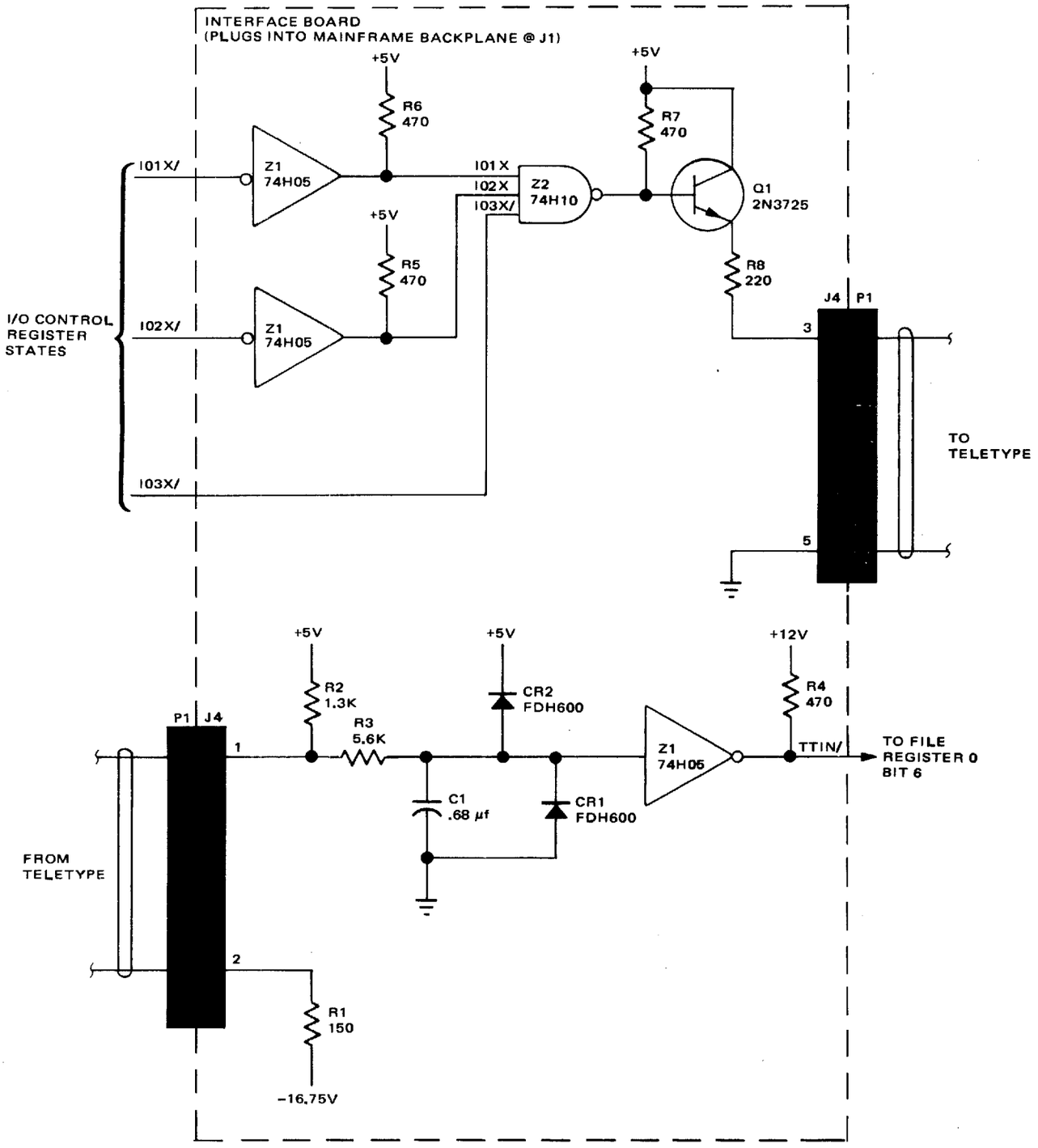

Figure 4-1. Serial I/O Interface Circuit (For ASR 33 TTY)

The receive portion of the interface circuit contains a low-pass filter network connecting the teletype distributor to bit 6 of File Register 0 where it may be sensed by microcommands. One side of the teletype distributor is connected to -16.75 volts through resistor R1. The other side of the distributor is connected to Z1, which forms bit 6 of File Register 0. When the Teletype sends a mark signal, the output of Z1 is held low and a zero bit appears in bit 6 of File Register 0. When the Teletype sends a space signal, a one bit appears in bit 6 of File Register 0.

4.3.2 CHARACTER ASSEMBLY AND DISASSEMBLY

Teletype character assembly, disassembly, synchronization, and timing is accomplished by a firmware routine initiated by the macro instructions for the serial I/O interface.* Figure 4-2 shows the timing for transmitting or receiving 110-baud teletype characters.

*The Micro 1600/10 and 1600/13 are the only standard firmware which have these serial I/O macro instructions.

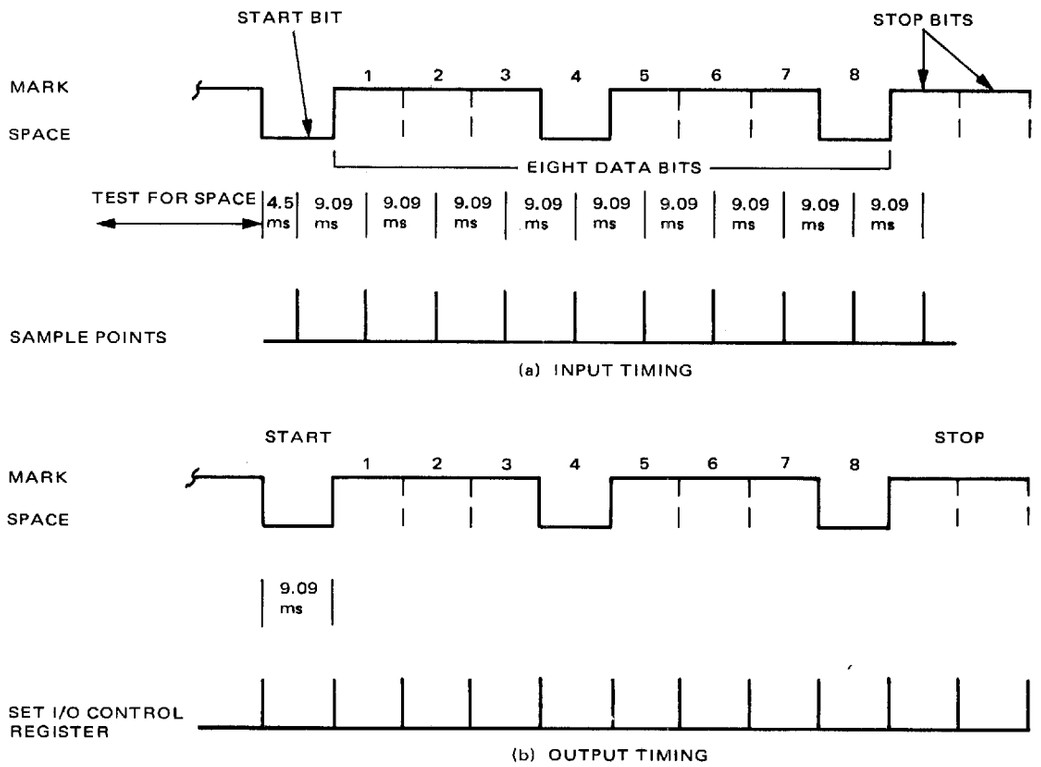

Figure 4-2. Serial I/O Timing

During an input operation the firmware program searches for the leading edge of the start bit by continuously testing bit 6 of File Register 0. Once a space level is detected, the firmware program delays 4.5 milliseconds and samples the input every 9.09 milliseconds, shifting each bit into the least significant byte of the A Register (File Register 4). The initial delay of 4.5 milliseconds, after detecting the leading edge of the start bit, causes sampling to occur in the middle of each bit. The firmware routine exits after eight bits have been assembled.

During an output operation, the firmware program sets the I/O control register to the appropriate mark or space condition every 9.09 milliseconds according to the start and stop bits and the data to be serially transmitted. Before the first information bit is transferred, the I/O control register is set to mode 3 to transmit the start bit. The firmware program for transmitting a teletype character remains active for 11 intervals (100 milliseconds) to assure the proper stop interval before the next character is transmitted.

4.3.3 SERIAL I/O INSTRUCTIONS

Two macro instructions affect the operation of the serial I/O interface: Input Byte Serially (IBS), and Output Byte Serially (OBS).

The Input Byte Serially instruction transfers an eight-bit character from the Teletype into the eight low-order bits of the A Register. The execution of this instruction terminates when a complete teletype character has been received. For proper operation, execution of the instruction must be started before the start of the teletype character. Once the instruction is started, the computer becomes tied up until a teletype character is received. The execution time of the instruction extends approximately 84 milliseconds after the leading edge of the teletype character start bit. When the program echoes input characters back to the Teletype, the effective input rate cannot exceed five characters per second, (no input can be handled during the 100 milliseconds required for output).

The Output Byte Serially macro instruction disassembles the eight low-order bits of the A Register and transfers them serially, as a teletype character, through the serial I/O interface. During the execution of this instruction, the eight low-order bits of the A Register are set to ones, the eight high-order bits remain unchanged.

4.3.4 TELETYPE INTERFACE CONNECTION

The standard Teletype model ASR-33TY with 20 ma loop interface is directly compatible with all Microdata TTY controllers. Procedures for modifying other standard ASR-33 or ASR-35 Teletypes for use with Micro 1600 series computers are given in Appendix C.